Foredge

1.6T ACC High-Speed Cable

HACC-OSFP-1.6T

1.6T to 1.6T (OSFP to OSFP) ACC Cable
HACC-OSFP-1.6T-XXM

Key Features:

- ✓ Supports 224G aggregate data rate (PAM4)
- ✓ Pull-to-release sliding latch design
- ✓ Maximum transmission distance up to 1.5M
- ✓ Operating temperature: 0~70°C
- ✓ Compliant with RoHS standards
- ✓ 3.3V DC voltage
- ✓ 26AWG wire gauge

Applications:

- ✓ Data Center Network
- ✓ Switch / Router /Servers /Storage Arrays
- ✓ Networking Equipment
- ✓ Data storage and communication industry

Standard Compliance:

- ✓ Compliant with PAM4
- ✓ OSFP MSA
- ✓ ROHS

Product Introduction:

Foredge 1.6T ACC high-speed cables support transmission rates of 1600Gbps, widely used in data centers, network equipment, and more. They offer 100% perfect compatibility with all major brands of servers, switches, routers, and other devices. OSFP high-speed cables meet the demands of hardware communication equipment and data centers for high-density port configurations while maintaining low cost and low power consumption.

Absolute Maximum Ratings

Parameter	Symbol	Min.	Typ.	Max.	Unit	Note
Storage Temperature	Ts	-40		85	ºC	
Storage Ambient Humidity	HA	5		95	%	
Power Supply Voltage	VCC	-0.5		4	V	
Signal Input Voltage		-0.3		Vcc+0.3	V	

Recommended Operating Conditions

Parameter	Min.	Typ.	Max.	Unit	Note
Operating Case Temperature	0		70	ºC	
Power Supply Working Voltage	3.13	3	3.47	V	
Humidity	5		85	%	

Mechanical Dimensions

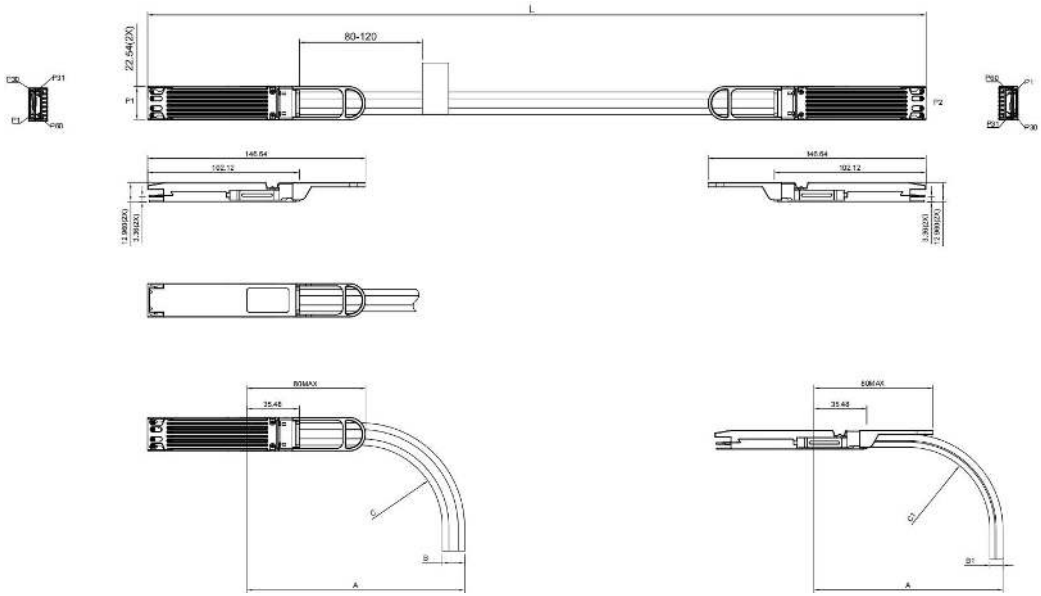

Order Information

Model	Speed	Cable Length	Wire Diameter
HACC-OSFP-1.6T-1M	1600Gbps	1M	26AWG
HACC-OSFP-1.6T-1.5M	1600Gbps	1.5M	26AWG

Important Notice

Performance figures, data and any illustrative material provided in this data sheet are typical and must be specifically confirmed in writing by Foredge before they become applicable to any particular order or contract. In accordance with the Foredge policy of continuous improvement specifications may change without notice.

The publication of information in this data sheet does not imply freedom from patent or other protective rights of Foredge or others. Further details are available from any Foredge sales representative.